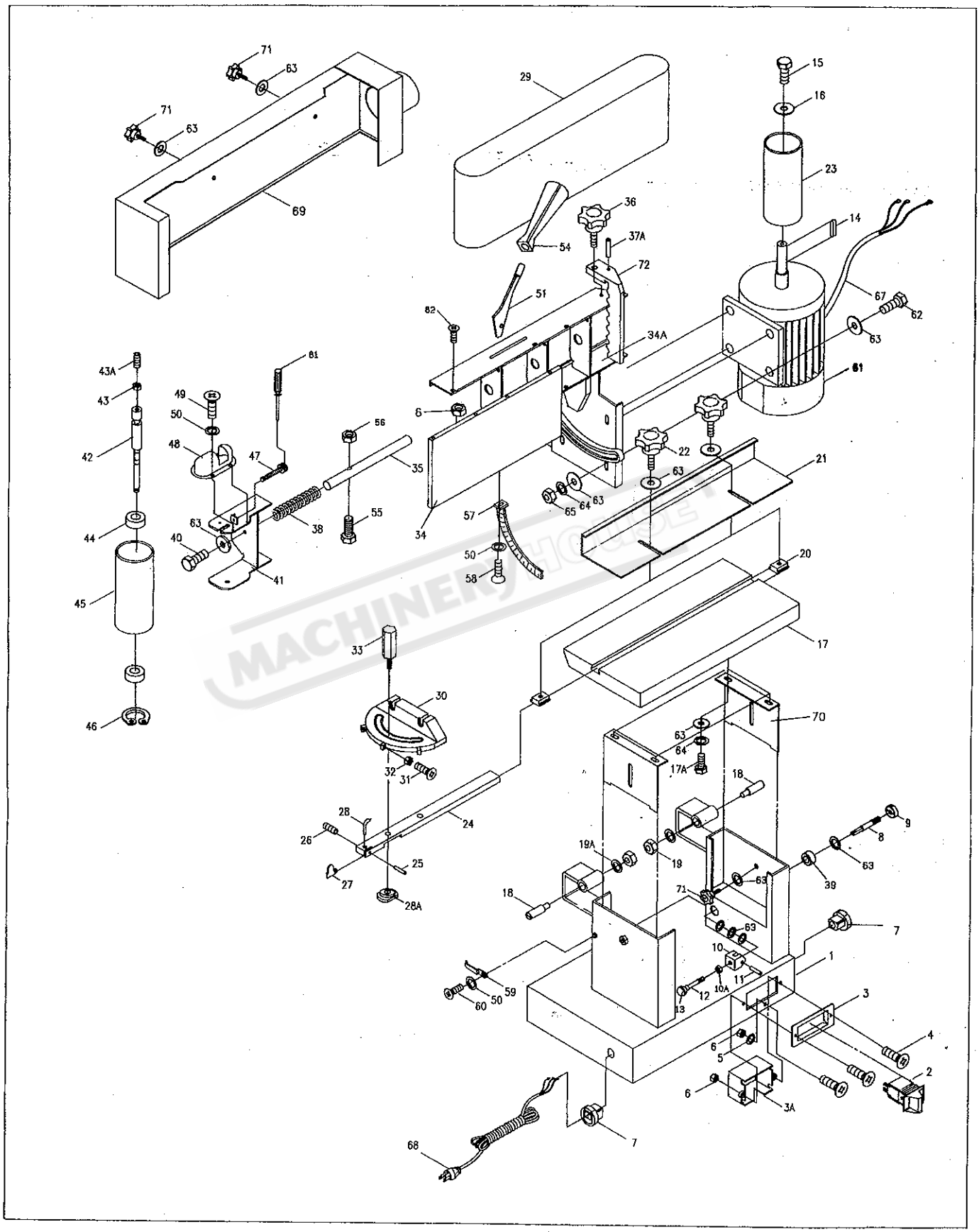
71
63
69
29
15
16
23
36
37A
54
72
14
51
67
62
82
34A
63
61
43A
43
49
50
6
56
22
42
48
47
35
21
63
64
63
65
44
40
38
55
57
34
41
50
58
20
45
17
33
30
70
63
64
17A
46
32
31
18
28
24
9
8
26
19A
19
63
25
27
71
63
39
18
28A
7
69
10
1
11
10A
12
13
59
50
60
3
4
6
5
2
6
3A
7
68

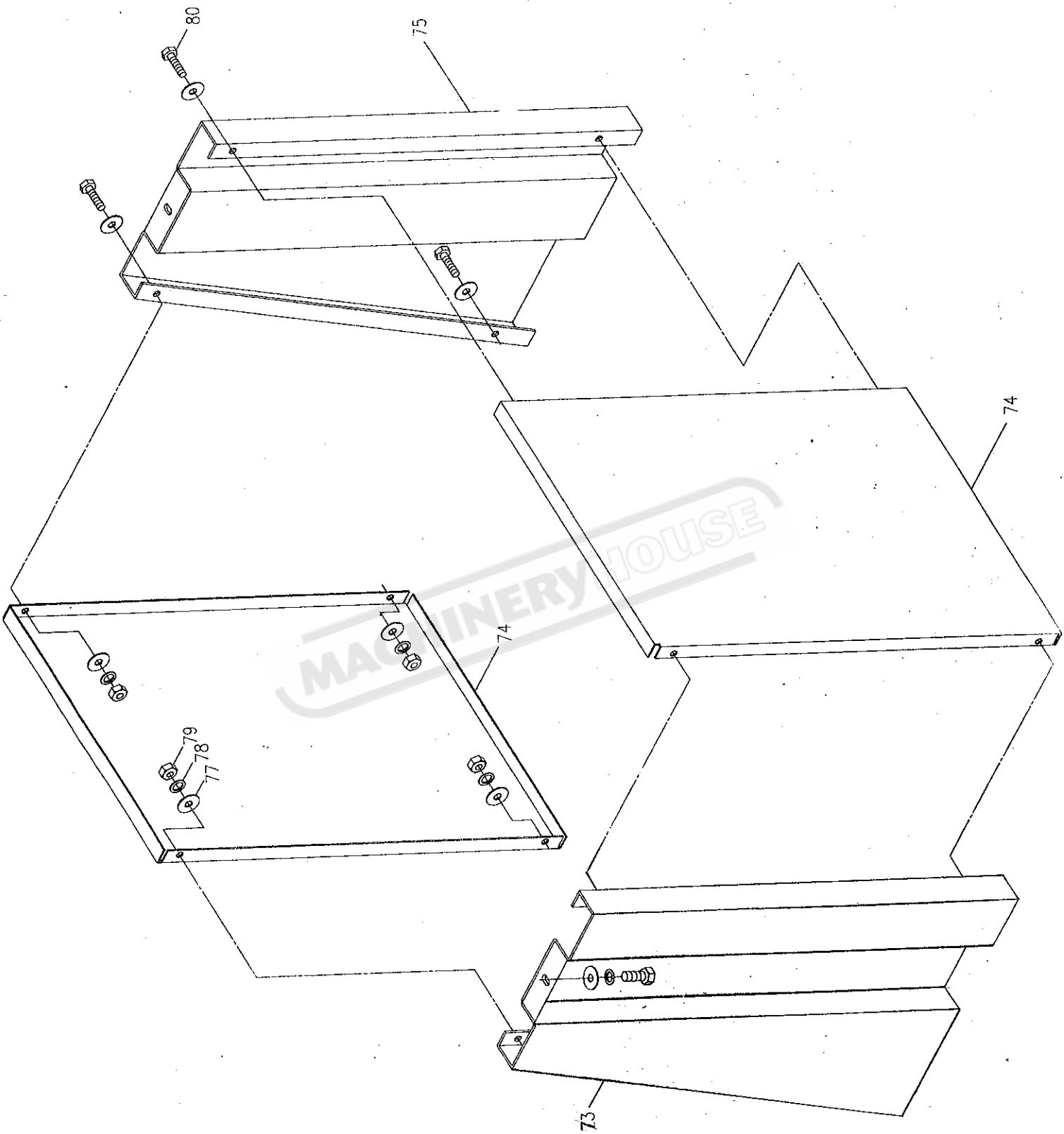

MACHINERY HOUSE

BIG BOY 80

Ref No.	Description	Part No.	Q'ty
BOY80-1	Base	20101001	1
BOY80-2	Switch	20101002	1
BOY80-3	Switch Panel	20101003	1
BOY80-3A	Switch Prortection Box	20101004	1
BOY80-4	3/16"-24X1 1/2" Phillips Pan Hd. Scr.	S0030324	3
BOY80-5	3/16" Gear Washer	S0220300	2
BOY80-6	3/16"-24UNC Nut	S0110300	5
BOY80-7	Nylon Clamper	S1017W-2	2
BOY80-8	Work Table Bracket	20101005	1
BOY80-9	Regulating Collar	20101006	1
BOY80-10	Cam Eccentric	20101007	1
BOY80-10 A	3/8"-16 Nut	S0110600	1
BOY80-11	Pin	20101008	1
BOY80-12	Handknob	20101009	1
BOY80-13	Hand Knob	20101010	1
BOY80-14	Key	S0400525	1
BOY80-15	1/4"-20Hex. Hd Scr.	S0020401	1
BOY80-16	Washer	S0210400	1
BOY80-17	Table	20101011	1
BOY80-17A	5/16"-18 Hex. Hd. Scr.	S0020500	4
BOY80-17a	Extension Platform	201010111	1
BOY80-17b	Extension Platform Suppot	201010112	1
BOY80-18	3/8"-16 Screw	20101012	2
BOY80-19	M10 X1.5 Her. Nut	S0111000M	2
BOY80-19 A	Spring Washer	S0210600	2
BOY80-20	Guide Block	20101013	1
BOY80-21	Fence	20101014	1
BOY80-22	M8-1.5X12m/m Knob	20101015	2
BOY80-23	Motor Roller	20101016	1
BOY80-24	Guide Bar	20102017	1
BOY80-25	Roll Pin	S0310306	1
BOY80-26	1/4"-20 x 1/4" Soc. Set Scr.	S0050404	1
BOY80-27	Locating Plate	20101028	1
BOY80-28	Pointer	20101019	1
BOY80-28A	Locating Block	20101020	1
BOY80-29	Sanding Belt	20101021	1
BOY80-30	Miter gage body	10104046	1
BOY80-31	5/32"-32 Rd. Hd. Scr.	S0030108	3
BOY80-32	5/32"-32 Her. Nut	S0110100	3
BOY80-33	Hand Knob	10104045	1
BOY80-34	Table	20101022	1
BOY80-34A	Sanding Cloth Platform	20101045	1
BOY80-35	Tension bar	20103023	1
BOY80-36	Knob	20101024	1
BOY80-36 A	1/4"x5/8"x20 UNC Knob	60105011	1
BOY80-37A	Pin	S0310640	1
BOY80-38	Spring	20103025	1
BOY80-39	Partition Ring	20101055	1
BOY80-40	5/16-18 X 5/16" Hex. Hd. Scr.	S0020510	1
BOY80-40A	Lifting Guide Pipe	20101050	1

Ref No.	Description	Part No.	Q'ty
BOY80-41	Roller arm	20103026	1
BOY80-42	Shaft	20103027	1
BOY80-43	1/4"-20 x 1/2" Sec. Set. Scr.	S0050408	1
BOY80-43A	1/4"-20 x 1/2" Nut	S0110408	1
BOY80-44	6004ZZ Bearing	S0716004	2
BOY80-45	Driven roller	20103028	1
BOY80-46	Spring ring	S0521705	1
BOY80-47	Micro-inching Screw	20103029	1
BOY80-48	Inching Protection cover	20101030	1
BOY80-49	3/16"-24x1/4"Rd. Hd. Scr.	S0030304	4
BOY80-50	Spring washer	S0230301	6
BOY80-51	Belt replacing plate	20101031	1
BOY80-52	M6x16 Hex. Hd. Scr.	S0010616M	5
BOY80-53	M6x15	S0210600	5
BOY80-54	Sand clamp handle	20101032	1
BOY80-55	5/16"-18unc X 3/4" Hex.Hd. Scr.	S0020512	1
BOY80-56	5/16"-18UNC Nut	S0120500	1
BOY80-57	Tilt scale	20101033	1
BOY80-58	3/16"-24UNC X 1/2" Cap Screw	S0040308	2
BOY80-58A	3/16"-24UNC Nut	S0110300	3
BOY80-59	Width pointer	20101034	1
BOY80-60	3/16"-24UNC X 3/8" Cap Screw	S0030306	2
BOY80-61	Motor	20101035	1
BOY80-62	5/16"-18 x 1½"Hex. Hd. Scr.	S0020520	7
BOY80-63	5/16" Washer	S0210500	19
BOY80-64	5/16" Spring washer	S0230500	20
BOY80-65	5/16"-18Nut	S0110500	9
BOY80-67	Switch cord	L0000000	1
BOY80-68	Power cord	L0000000	1
BOY80-69	Belt cover	20101038	1
BOY80-69A	Dustproof Protective Cover	20101038 A	1
BOY80-69 B	Dustproof Protective Cover	20101038 B	2
BOY80-70	Lifting Plate	20101002	2
BOY80-71	Knob	20101039	5
BOY80-72	Bracket	20101040	1
BOY80-73	Left Stand	20101041	1
BOY80-74	Partition board	20101042	2
BOY80-75	Right stand	20101043	1
BOY80-77	Washer	S0210500	18
BOY80-78	Spring washer	S0230500	10
BOY80-79	5/16"-18UNC Nut	S0110500	8
BOY80-80	5/16"-18 x 1" Hex. Hd. Scr.	S0020501	10
BOY80-81	Driver Wrench	20103044	1
BOY80-82	M5 – 12 Flat Hd. Scr.	S0040512-M	12